tapflo®

CUSTOMIZED FLOW SYSTEMS

2018 | 1

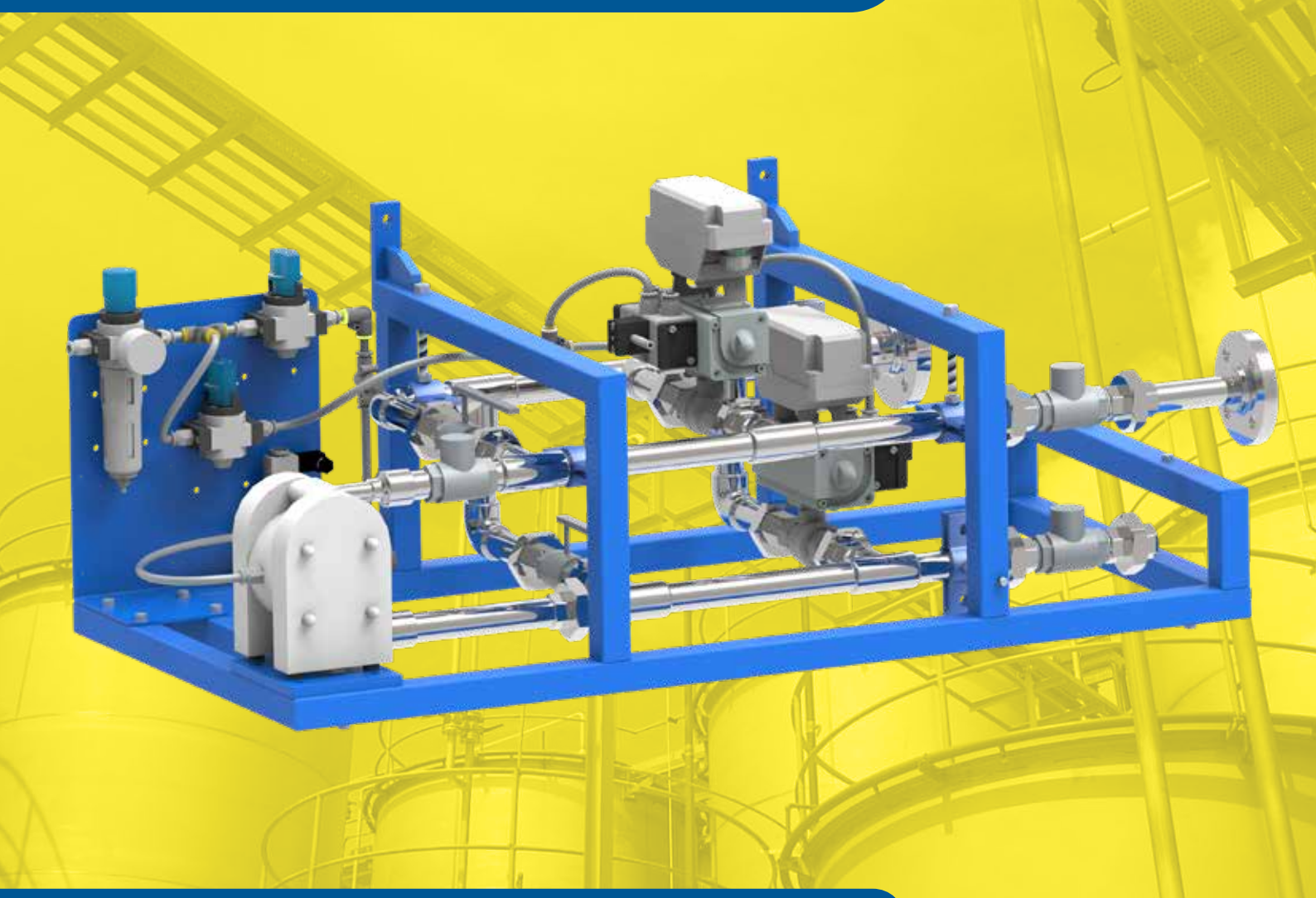

All about your flow

www.tapflo.com

All about your flow

Tapflo is a leading pump manufacturer with the ambition to provide a wide range of premium products for various industrial applications. We focus on delivering the best fluid processing solutions and support on all stages of the process, worldwide.

About Tapflo

Tapflo is an independent, Swedish, family owned manufacturer and global supplier of air operated diaphragm pumps, centrifugal pumps and other industrial process equipment. The company was founded in Kungälv, Sweden in 1980 and has since then been working with design and manufacture of thermoplastic, metal and sanitary series diaphragm pumps, as well as the complete range of centrifugal pumps and industrial equipment. After years of dynamic development, the company evolved into Tapflo Group with worldwide operations. Tapflo Group is represented by owned companies and independent distributors all over the world on 6 continents.

Quality certified

At Tapflo, we believe that quality is one of the highest values, both for our customers as well as our employees. As a result, we comply with various globally recognised certification and quality control institutions. Many of our products comply with EC ATEX directives for equipment intended for used in explosive and hazardous environments.
The aseptic series is EHEDG certified (European Hygienic Engineering & Design Group) and the pharmaceutical series has USP VI and EC 1935/2004 approval.
All of our products are clearly CE marked and followed by our comprehensive instruction manuals. Tapflo manufacturing process is certified according to ISO 9001:2015.

Our values

Long term engagement is our core

Our aim is to continuously provide premium products according to the evolving needs of our customers. That is why we see each customer relationship as a long term commitment.

Local means on your terms

Tapflo is your global partner providing local support. No matter where your plant is located, you can expect us to support you locally.

Flexibility the foundation of good service

We are prepared to deal with reality, knowing that in practice this means answering questions, offering solutions and supplying spare parts with a minimal loss of time.

Customising to bring the product to the needs

Our intention is always to help our clients find the most cost effective solutions to increase their company's efficiency.

If this means changing the design of the pump, we see it as a challenge - not a problem.

To produce is to develop

Being actively involved in the manufacturing of a product, it is almost impossible not to discover ways to improve it.

This allows us to frequently offer solutions that are even more sustainable and efficient.

Customized Flow Systems

Reliability and safety are found as the most desired characteristics of devices applied in industrial processes. To meet customers' need, Tapflo offers tailor-made flow systems of the highest quality. Our mission is to provide technical solutions that guarantee proper functionality and stable operation in every environment.

Tapflo solutions are successfully applied in the following applications:

Industrial sector:

- Chemical processing industry
- Oil & Gas
- Mechanical industry
- Surface treatment
- Pulp & paper industry
- Paint, print & varnish industry
- Waste water treatment

Hygienic & sanitary sector:

- Food, beverages & drinks
- Dairy, milk & ice cream
- Pharmaceutical industry
- Cosmetics industry
- Processed food

Tapflo Integrated Solutions

Tapflo offers integrated solutions as an possibility to apply standard devices in non-standard applications.

Combining different flow components into one complex unit is an opportunity to suit individual customers' needs, that are related to:

- Required equipment & functionality
- Available space
- Position of connecting flanges
- Mobility

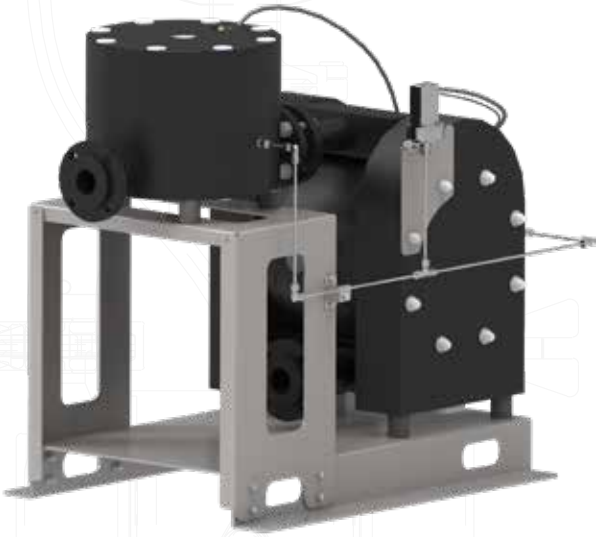

TXB400+DTBX400:
integrated with pneumatic Diaphragm Failure Monitoring System (**PDFM**).

T425+DT425:
integrated with air pressure booster, built on a hygienic frame.

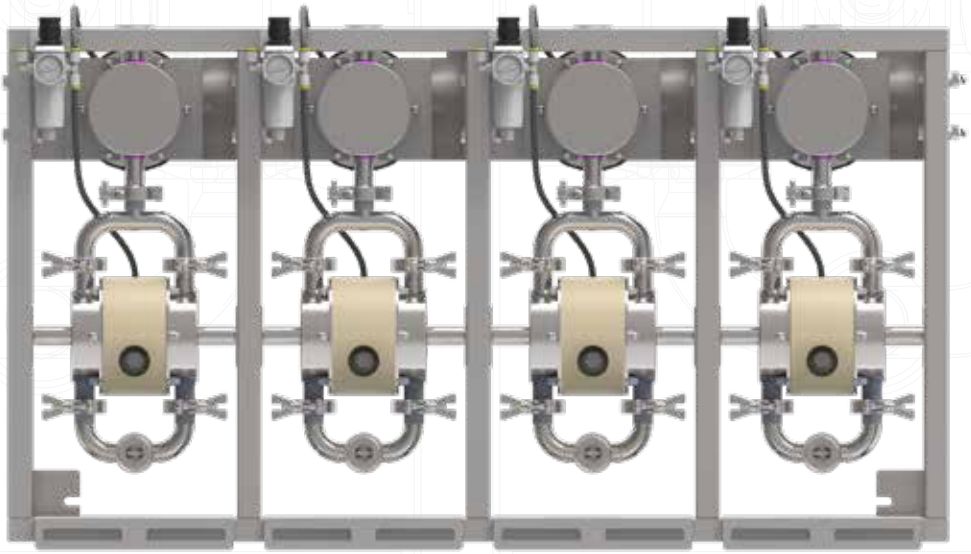

4x T80+DT80:
assembled on a hygienic frame with removable drip pans.

Tapflo Integrated Solutions

Tapflo biggest pumps & dampeners now available as integrated units!

- **T800+DT800 & T820+DT820**: built on one support frame with footprint reduced to less than 0,6 m^2!

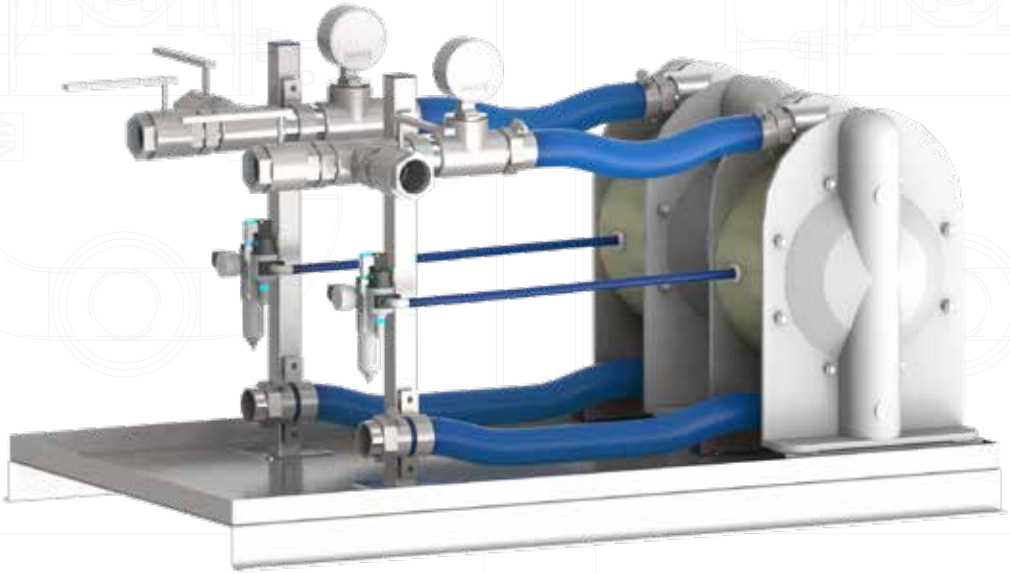

- **2xT420:**
  Compact assembly on a support frame with a drip pan.
  Ball valves and pressure indicators included to meet customer's needs.

SKID - Customized Process Units
Main elements of Tapflo pumping SKID

Every need for a non-standard pumping system is an opportunity for us to create a unique, made-to-measure SKID.

Tapflo Engineering to Order team has developed a complex unloading solution, that is successfully used to unload barrels containing various chemicals. Tapflo AODD pump is a heart of this process.

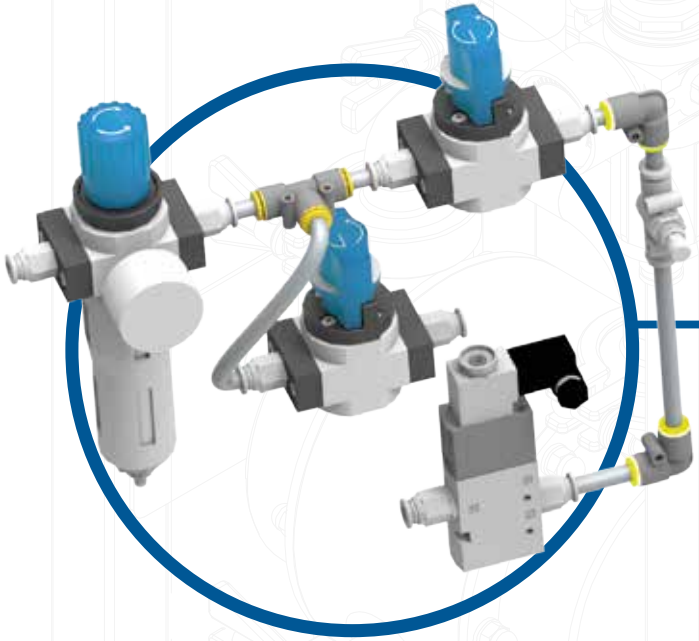

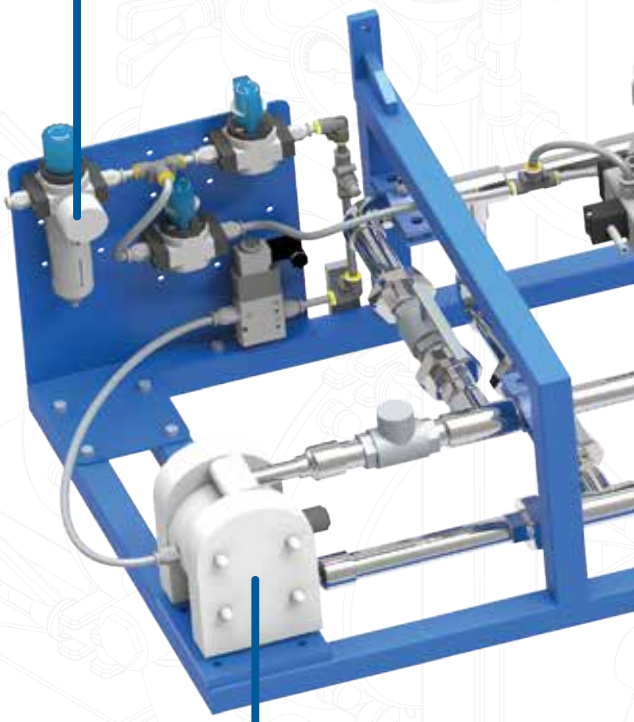

Pneumatic or electric control system:
To optimize the process and have control over it. The pump is stopped after each barrel is emptied. After that the pipelines are flushed with water.

Tapflo pump:
It is the heart of Your process. Tapflo AODD pumps can handle almost every liquid.

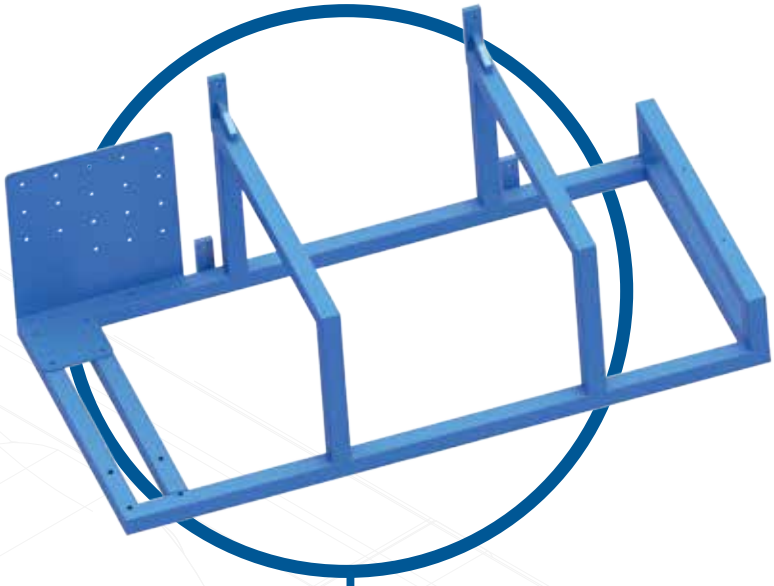

Support frame:
To keep the unit steadily and fit it to available space. Both industrial & hygienic standards are available.

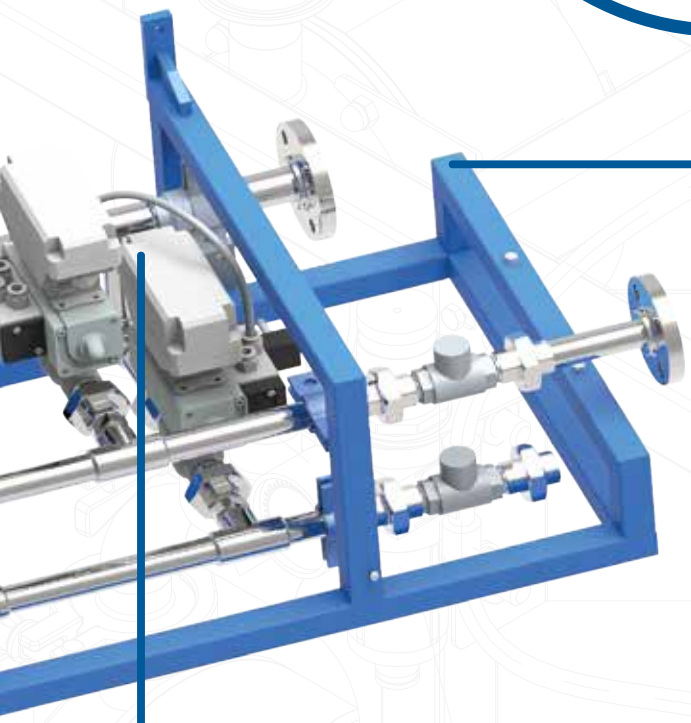

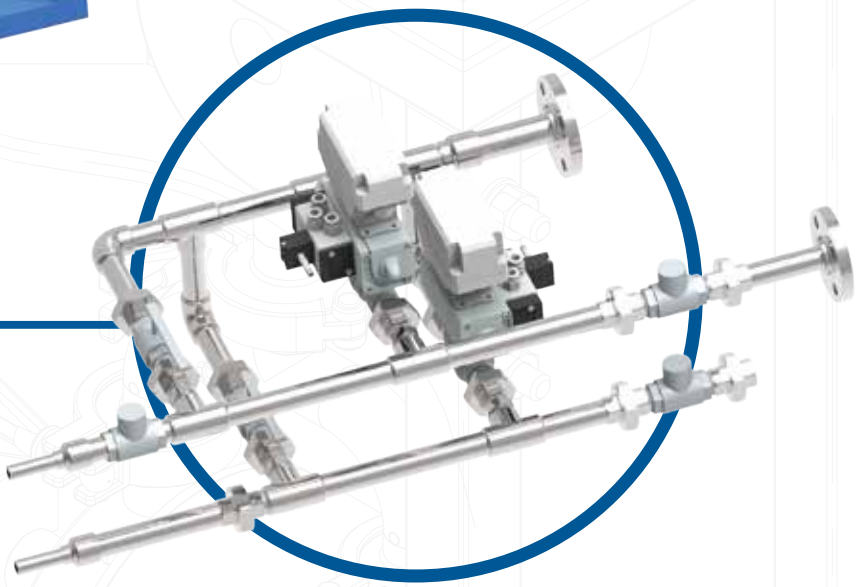

Control valves & pipelines:
As we care about proper flow properties, pipelines in every SKID unit are being analyzed and adjusted to obtain the best possible hydraulic conditions.

SKID - Customized Process Units
Sample solutions

Based on strong experience in design and production, Tapflo offers wide range of compact process pumping systems.

We create units that are dedicated to certain applications in certain industrial sectors. In Tapflo we provide almost limitless possibilities of pump units' development, both in mechanical & automation disciplines.

In addition, Tapflo might take responsibility for project management, assembly works and integration with existing on site systems.

"WE WORK IN A TURN-KEY STANDARD"

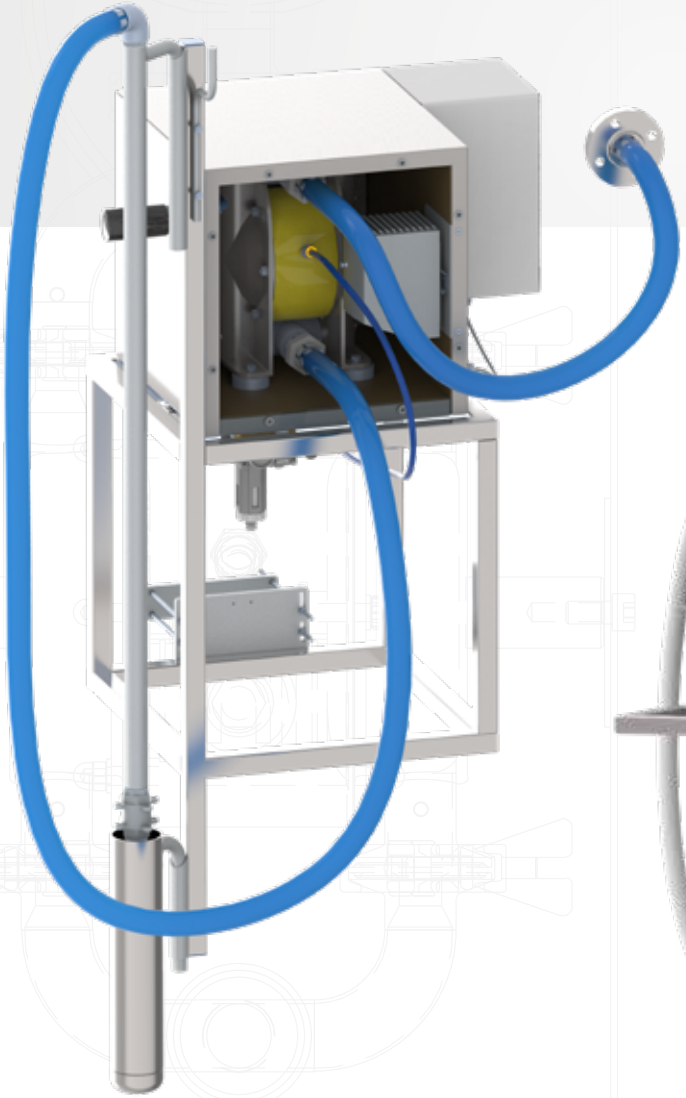

IBC containers unloading unit
Including **Tapflo T120** pump built in a temperature proof box with a control panel. Ready to work in low ambient temperatures.

Mobile mixing & unloading tank
Tapflo CTV 40-13.5 pump to operate in paint industry.

SKID - Customized Process Units
Sample solutions

"TAPFLO BRINGS FUNCTIONALITY"

Ethanol dispensing and filtering unit:

Tapflo TRX20 pump unloading a container at pharmaceutical factory. ATEX-approved unit.

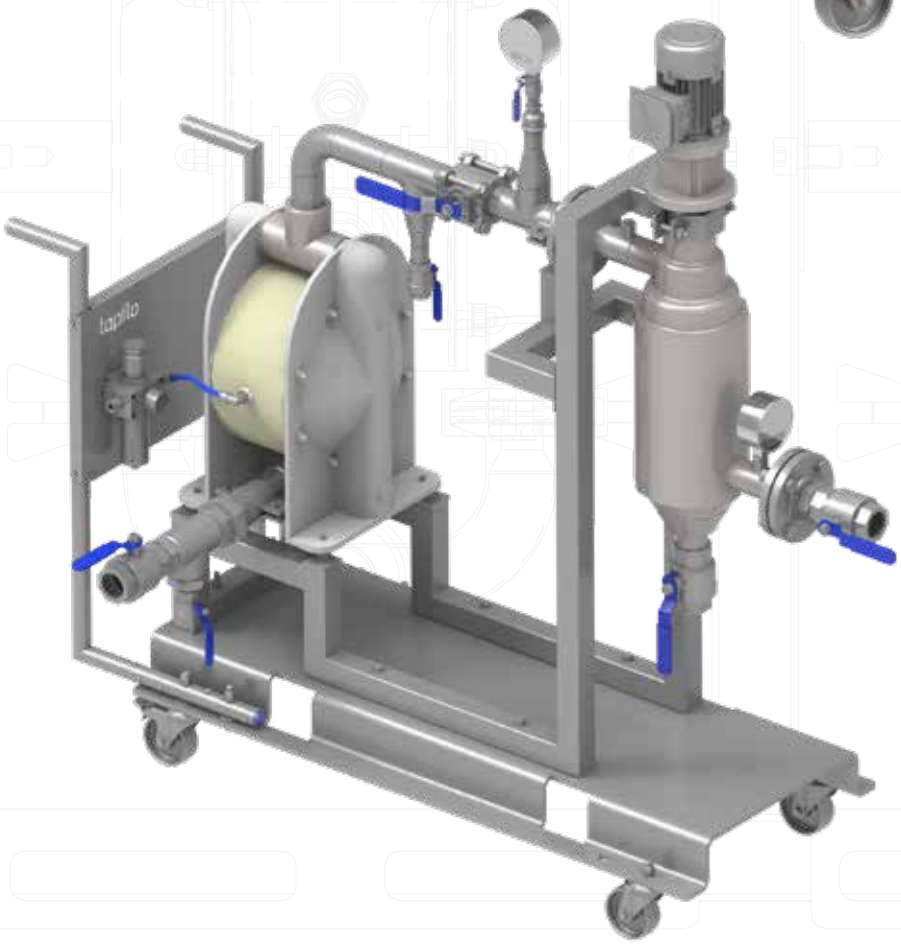

Mobile filtration unit:

Tapflo T420 pump suppling paint resin through a self-cleaning filter.

Tapflo Automation & Control Solutions

Tapflo is proud to announce, that we have broaden our offer with automation & control solutions.

By using both pneumatic and electric devices to monitor flow parameters, we are able to ensure safe work of all Tapflo pump units.

Air Operated Double Diaphragm Pumps

Pneumatic Diaphragm Failure Monitoring System **(PDFM)**

Pneumatic Dry-Run & Dead Head Protection Systems (**PDRN, PDHR, PDHS**)

Electronic Dry Run & Dead Head protection system (**EDHR**)

Centrifugal Pumps

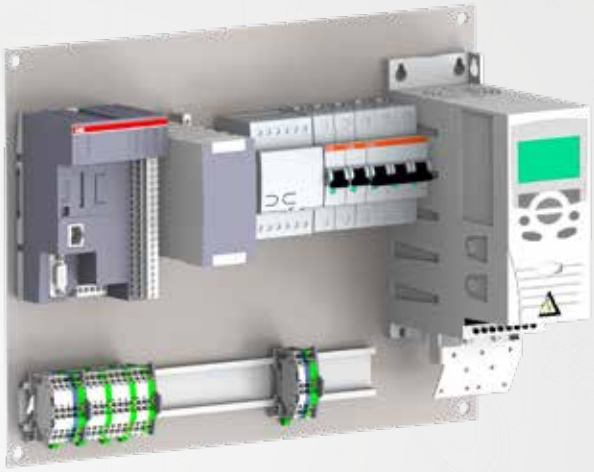

Stainless and painted steel control cabinets available!

- Built-in frequency inverter
- Start & stop pushbuttons
- Main switch: padlockable in OFF position for service purpose
- Configured according to customer's guidelines

Product range

Diaphragm pumps & accessories

PE & PFTE pumps

Metal pumps

Pharmaceutical pumps

Sanitary pumps

TC Intelligent pumps

Powder pumps

TF Filter press pumps

EHEDG aseptic pumps

Active pulsation dampeners

Systems & accessories

Trolleys

Centrifugal pumps, filter units & accessories

CTI & CTH centrifugal pumps

CTP plastic centrifugal pumps

CTM magdrive centrifugal pumps

CTV vertical centrifugal pumps

CTS self-priming centrifugal pumps

Trolleys

FT Filter units

TAPFLO AB

Sweden

Filaregatan 4 | S-442 34 Kungälv

Tel: **+46 303 63390**
Fax: **+46 303 19916**

E-mail addresses:
Commercial questions: **sales@tapflo.com**
Orders: **order@tapflo.com**
Tech support: **support@tapflo.com**

Tapflo products and services are available in 75 countries on 6 continents.

Tapflo is represented worldwide by own Tapflo Group Companies and carefully selected distributors assuring highest Tapflo service quality for our customers' convenience.

AUSTRALIA | AUSTRIA | AZERBAIJAN | BAHRAIN | BELARUS | BELGIUM | BOSNIA | BRAZIL | BULGARIA | CANADA | CHILE | CHINA | COLOMBIA | CROATIA | CZECH REPUBLIC | DENMARK | ECUADOR | EGYPT | ESTONIA | FINLAND | FRANCE | GREECE | GEORGIA | GERMANY | HONG-KONG | HUNGARY | ICELAND | INDIA | INDONESIA | IRAN | IRELAND | ISRAEL | ITALY | JAPAN | JORDAN | KAZAKHSTAN | KUWAIT | LATVIA | LIBYA | LITHUANIA | MACEDONIA | MALAYSIA | MEXICO | MONTENEGRO | MOROCCO | THE NETHERLANDS | NEW ZEALAND | NORWAY | POLAND | PORTUGAL | PHILIPPINES | QATAR | ROMANIA | RUSSIA | SAUDI ARABIA | SERBIA | SINGAPORE | SLOVAKIA | SLOVENIA | SOUTH AFRICA | SOUTH KOREA | SPAIN | SUDAN | SWEDEN | SWITZERLAND | SYRIA | TAIWAN | THAILAND | TURKEY | UKRAINE | UNITED ARAB EMIRATES | UNITED KINGDOM | USA | UZBEKISTAN | VIETNAM

Tapflo Group Companies

Austria
Tapflo Austria
Tel: +43 732 27292910
sales@tapflo.at

Azerbaijan
Tapflo Makina Ltd
Tel: +90 216 467 33 11
sales@tapflo.com.tr

Baltic States
Tapflo Latvia
Tel: +371 67472205
sales@tapflo.lv

Belarus
Tapflo Belarus
Tel: +375 17 3934609
sales@tapflo.by

Bulgaria
Tapflo EOOD
Tel: +359 (0)2 974 18 54
office@tapflo.bg

Canada
Tapflo Canada
Tel: +1 514 813 5754
canada@tapflo.com

Croatia
Tapflo GmbH
Tel: +385 91 4884 666
sales@tapflo.hr

Czech Republic
Tapflo s.r.o.
Tel: +420 513 033 924
tapflo@tapflo.cz

China
Tapflo (Wuxi)
Tel: +86 510 8241 7072
sales@tapflo.cn

Denmark
Tapflo Danmark
Tel: +45 36 454600
info@tapflo.dk

France
Tapflo France
Tel: +33 1 34 78 82 40
info@tapflo.fr

Georgia
TOB Tapflo
Tel: +380 44 222 68 44
sales@tapflo.com.ua

India
Tapflo Fluid Handling India Pvt Ltd
Tel: +91 20 65000215
ad@tapflo.in

Ireland
Tapflo Ireland Ltd
Tel: +353 1 2011911
info@tapflo.ie

Italy
Tapflo Italia
Tel: +39 0362307698
info@tapfloitalia.com

Japan
Tapflo Japan K.K.
Tel: +81-3-6240-3510
tapflojp@tapflo.co.jp

Kazakhstan
Tapflo Kazakstan
Tel: +7 727 3278347
sales@tapflo.kz

Poland
Tapflo Sp. z o.o.
Tel: +48 58 530 42 12
info@tapflo.pl

Romania
S.C. Tapflo Rom. S.r.l.
Tel: +40 21 3451255
sales@tapflo.ro

Russia
Tapflo Company
Tel: +7 495 232 18 28
sales@tapflo.com.ru

Serbia
Tapflo d.o.o.
Tel: +381 21 44 58 08
sales@tapflo.rs

Slovakia
Tapflo s.r.o.
+421 911 137 883
tapflo@tapflo.sk

Slovenia
Tapflo GmbH
Tel: +386 68 613 474
sales@tapflo.hr

Spain
Tapflo Iberica
Tel: +34 91 8093182
avives@tapfloiberica.es

South Africa
Tapflo (Pty) Ltd
Tel: +27 31 701 5255
sales@tapflo.co.za

Turkey
Tapflo Makina Ltd
Tel: +90 216 467 33 11
sales@tapflo.com.tr

Ukraine
TOB Tapflo
Tel: +380 44 222 68 44
sales@tapflo.com.ua

Uzbekistan
Tapflo Uzbekistan
Tel: +998 712370940
sales@tapflo.uz

United Kingdom
Tapflo (UK) Ltd
Tel: +44 2380 252325
sales@tapflopumps.co.uk

www.tapflo.com

Tapflo® is a registered trademark of Tapflo AB. All rights reserved.
Information in this document is subject to change without notice. Reproduction in any manner without written permission of Tapflo Group is forbidden.
Tapflo Group reserves the right to make changes in product design, or detail, and to discontinue any product or material without notice.

Art. No. 10-2216